INSTALLATION INSTRUCTIONS

ISCI SPY-ARM-ADJ SPYDER ARM REST

Great care has gone into providing complete and thorough installation instructions. Use the torque values listed on the Assembly Drawing when tightening all fasteners. Use the supplied Loctite on all fasteners that do not have any mechanical locking device. See terms and conditions located at the end of this document.

1. Ensure that all parts and the proper quantities of parts that are listed in the Parts List on the Assembly Drawing are in the package. Some of these items are pre-assembled.
2. These armrests will work with or without GIVI Saddlebags installed.
3. Remove the seat.
4. In the area under the passenger part of the seat there are 4 bolts that the brackets attach to as shown in the following pictures. If you have GIVI Saddlebags installed, go to page 6.

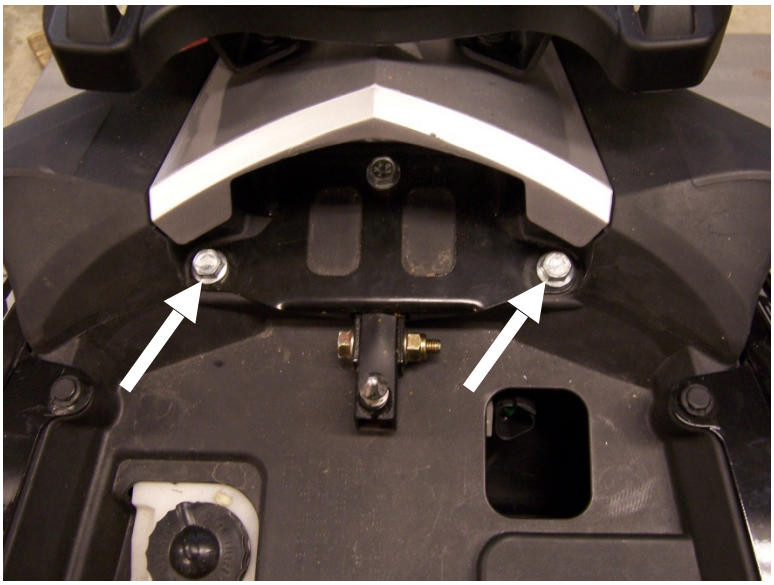

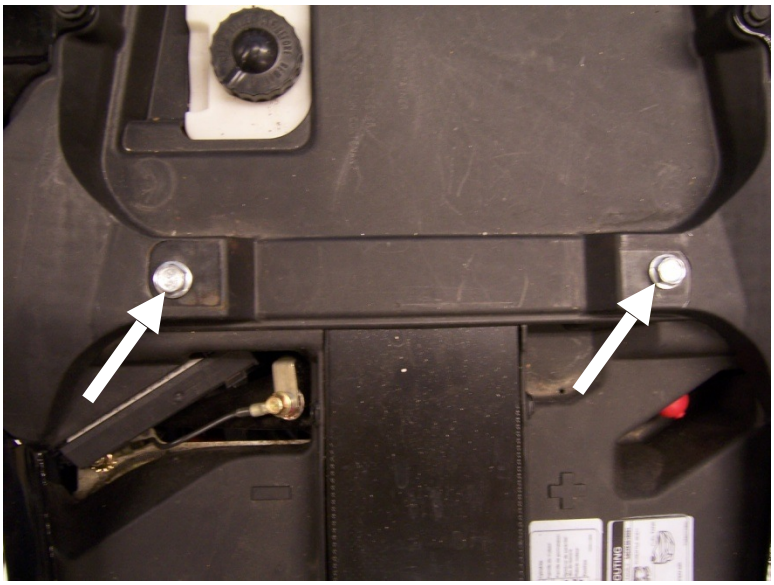

5. Remove each bolt individually and place Forward and Rear Underseat Brackets as shown in the following pictures. DO NOT TIGHTEN THESE BOLTS AT THIS TIME.

Rear Underseat Brackets

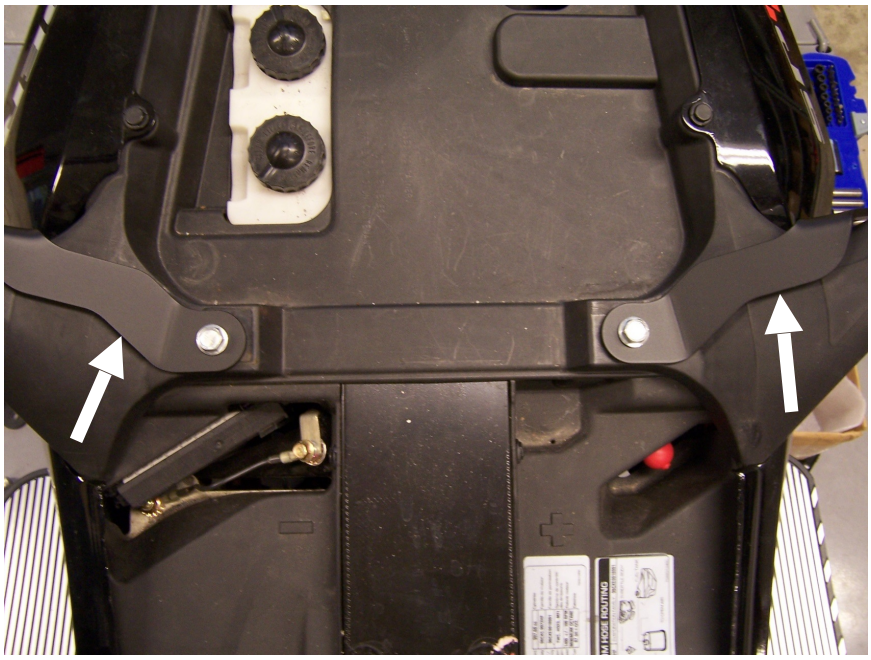

Forward Underseat Brackets

6. Now you will attach each Armrest Assembly to the brackets as shown in the following picture. DO NOT TIGHTEN ANY BOLTS UNTIL ALL OF THEM HAVE BEEN INSTALLED.

7. Each Armrest Upright (Items #8 and #9) has a Rubber Bumper (Item #28) installed on one side. These bumpers face the outside of the Spyder. Shown in the following picture is the left Armrest Assembly.

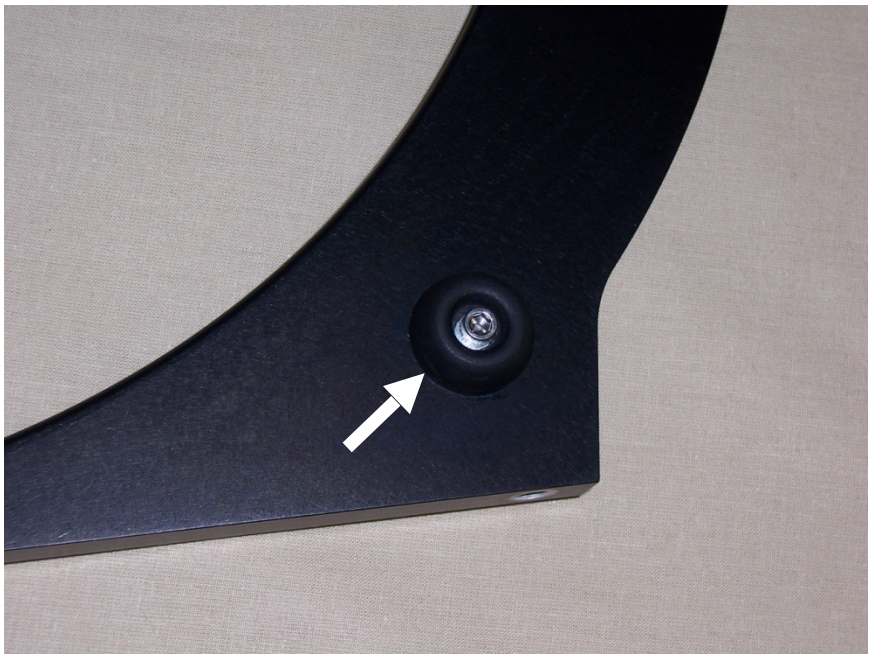

8. Install a ¼”–20 X ¾” (Item #25) through the Rear Underseat Bracket and into the bottom of the Armrest Upright as shown in the following picture. DO NOT TIGHTEN!

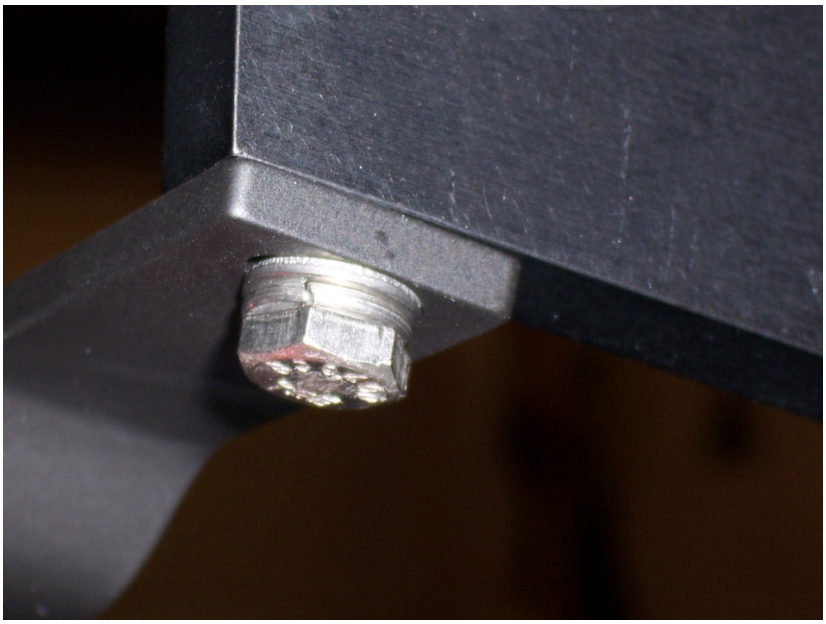

9. Each side will have a Transition Block (Item #7) loosely attached to the Armrest Uprights (Items #8 and #9). Remove this bolt (Item #24) and apply Loctite then reattach. Insert 5/16”–18 X 5/8” SHCS (Item #23) through 5/16” Washer

(Item #29) through the Forward Underseat Bracket and into the tapped hole in the Transition Block. DO NOT TIGHTEN!

10. Ensure that corner of the Armrest Uprights (Items #8 and #9) aren't resting against the inside of the hand holds as shown below.

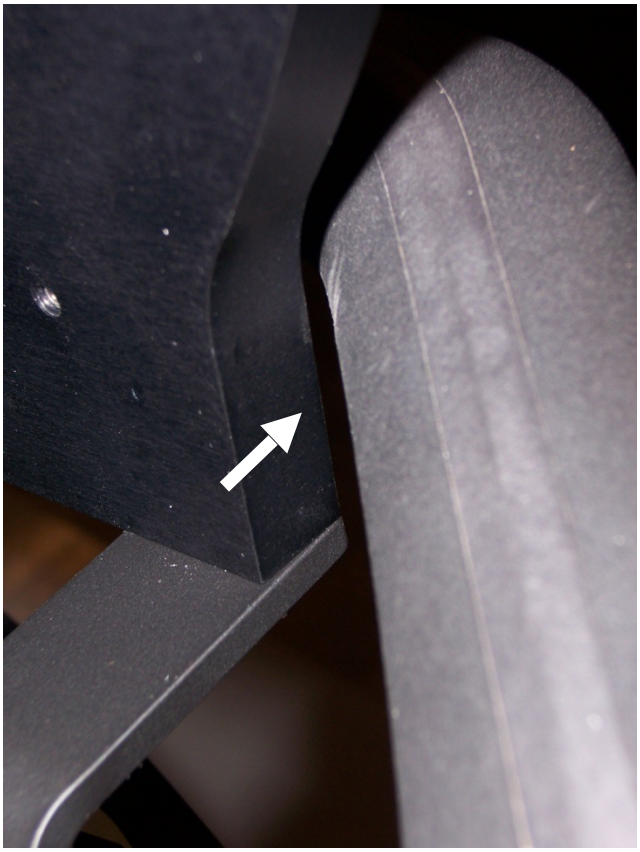

11. Now the bolts can be tightened up. The two 5/16"–18 SHCS are to be tightened with the supplied Allen wrench as shown in the two pictures below.

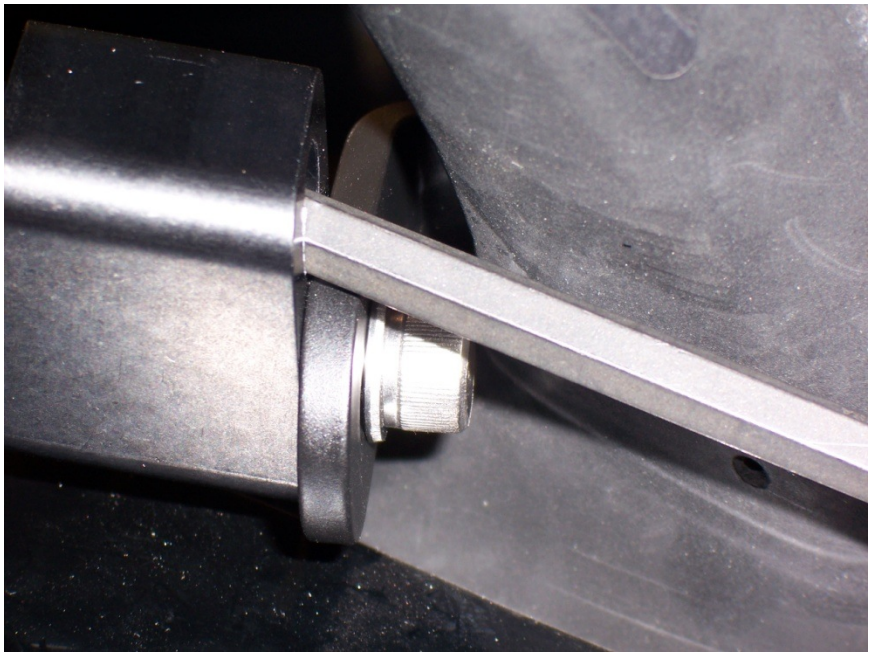

12. Tighten all remaining bolts under the seat. Reinstall the seat and the installation is complete.
13. When you have the height adjusted to the level that you like, be sure to add Loctite to the screws (Item #27) and tighten securely.

If for some reason you are having trouble with any part of this installation please do not hesitate to give us a call at 334-277-2224. Ask for Jeff Kranzusch.

This section is if you have GIVI Saddlebags installed.

14. If you already have the GIVI Saddlebags installed you will use the Forward Underseat Brackets that GIVI uses. Just loosen the bolts that hold them under the seat for now.

15. The Rear Underseat Bracket is placed on top of the GIVI Bracket. Remove the bolt holding it in place and replace with 8mm X 55mm SHCS (Item #17) as shown below.

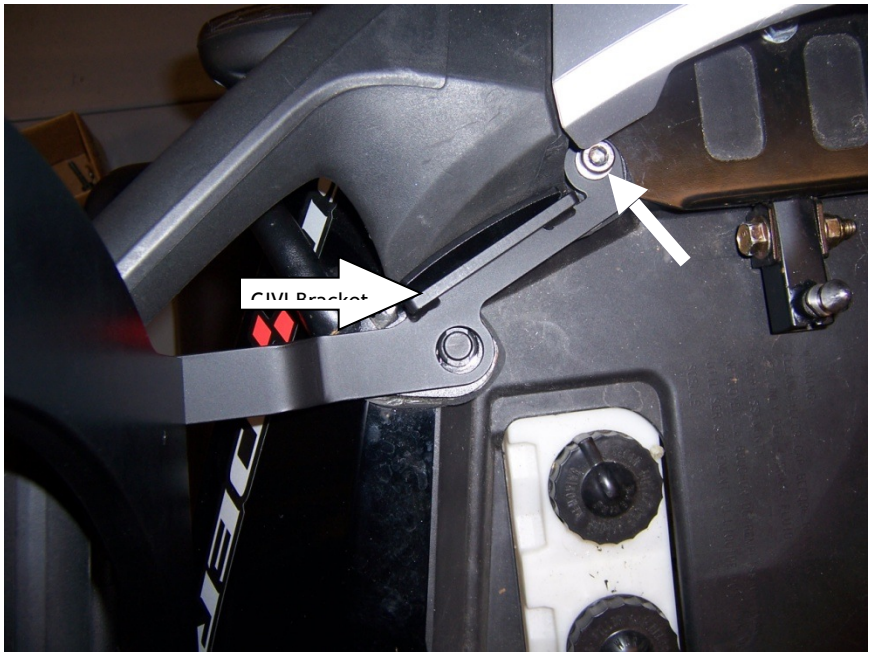

16. Attachment at the front is basically the same except that now you have the saddlebag bracket to go through with the 5/16”–18 SHCS as well.

17. Attachment in the rear is the same.

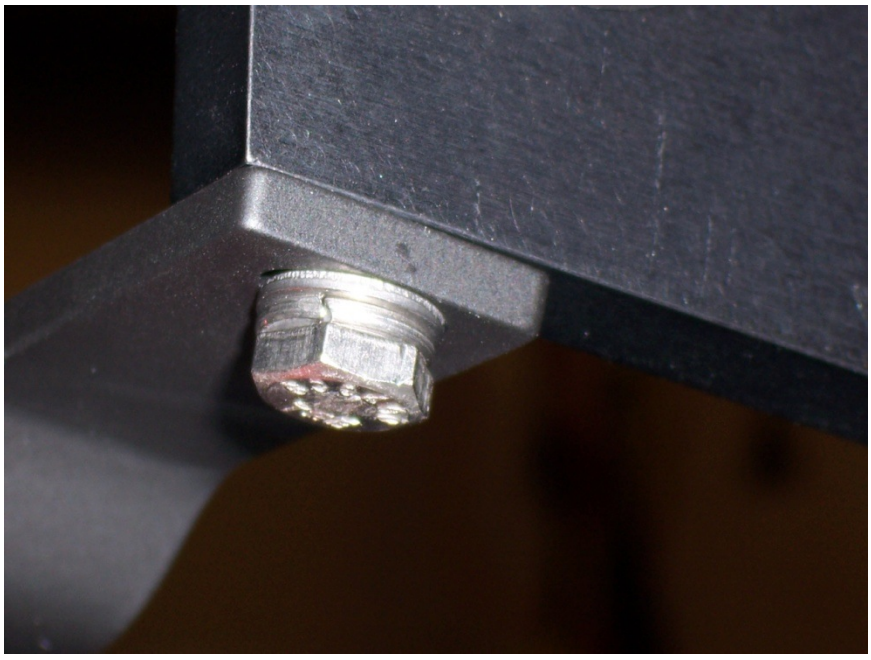

18. Now go back and complete steps 10 through 12.

PARTS LIST						
ITEM	QTY	REV	PART NUMBER	DESCRIPTION	DIMENSIONS	PNL PN
1	2	C	348171351_RevC	Hinge Plate	1/2" X 1-3/8" X 2-1/2"	
2	2	B	353_RevB	Catch Plate	1/4" X 2-1/4" X 2-3/8"	
3	1	C	354_RevC	Rear Under Seat Bracket Assy	3/16" X 3-1/2" X 7-1/4"	
4	1	C	354_RevC_LH	Rear Under Seat Bracket_LH Assy	3/16" X 3-1/2" X 7-1/4"	
5	1	A	355	Forward Under Seat Bracket	3/16" X 3-7/8" X 6-3/4"	
6	1	A	355_LH	Forward Under Seat Bracket_LH	3/16" X 3-7/8" X 6-3/4"	
7	2	A	357	Transition Block	1" X 1-1/2" X 1-5/16"	
8	1	B	348171361_RevB	Adj. Armrest Upright	1/2" X 8-1/16" X 9-3/4"	
9	1	B	348171361_LH_RevB	Adj. Armrest Upright	1/2" X 8-1/16" X 9-3/4"	
10	1	A	348171362	Adjusting Bracket	11/16" X 2" X 8-3/4"	
11	1	A	348171362_LH	Adjusting Bracket	11/16" X 2" X 6-3/4"	
12	1	A	348171363	Arm Rest Plate	1/2" X 1-1/2" X 8-7/8"	
13	1	A	348171363_LH	Arm Rest Plate	1/2" X 1-1/2" X 6-3/4"	
14	2		90183A325	1/4" SS Washer		
15	2		90298A546	1/4" Shoulder Bolt	1-1/2" lg	
16	4		90313A283	1/4" Washer		
17	2		91292A156	8mm SHCS	55mm lg.	
18	2		92146A029	1/4" SS Lock Washer		
19	2		92196A186	8-32 SHCS	5/8"	73423
20	4		92196A537	1/4"-20 SHCS	1/2" lg	
21	2		92196A539	1/4"-20 SHCS	5/8" lg	
22	2		92196A544	1/4"-20 SHCS	1-1/4" lg	
23	2		92196A580	5/16-18 SHCS	5/8" lg	1173493
24	2		92196A583	5/16"-18 SHCS	1" lg	
25	2		92248A540	1/4"-20 Hex Head	3/4" lg	
26	4		92948A537	1/4-20 BHCS	1/2" lg	
27	4		92948A539	1/4-20 BHCS	5/8" lg	
28	2		9540A39	Rubber Bumper	1" DIA. X 11/32" ht	
29	4		98817A680	5/16" SS Washer		
30	2		Arm Rest			

REVISION HISTORY			
REV	DESCRIPTION	DATE	APPROVED
A	Released for Production	02/01/10	

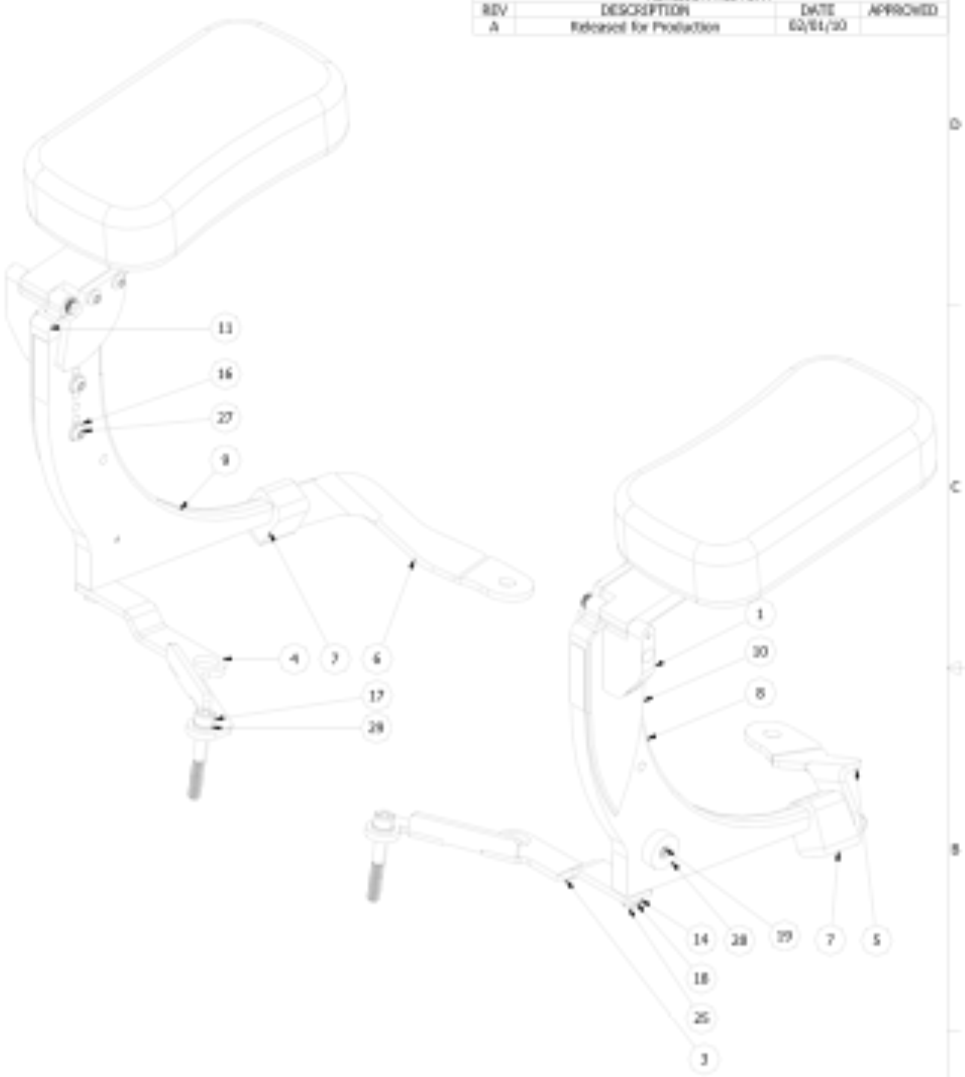

Industrial Specialty Co. Inc. Proprietary Property

This drawing is the proprietary property of Industrial Specialty Company Inc., and must not be used except in connection with our work, nor in any manner disclosed to any third party without Industrial Specialty Company Inc.'s prior written consent, all rights of design and invention are reserved.

Scale: NTS | Drawing Unit: IN. [mm]

Tolerances
Unless Noted Otherwise

Inches	.000 ± .005	.00 ± .01	.X ± .02
Fract.	± 1/32"		
Metric	.00 ± .13	.X ± .25	.X ± .5
Angle	± 0-30		

Date: 3/20/2010	Material	Dimensions	
Drawn By: R.L.K.	Part #: SPY-ARM-SHORT_RevX	Finish	
Surface Area: 894.18 in^2	Description: Arm Rest Assembly (Short)	Company: ISCI	Model File #: M134917-1SPY-ARM (ARM REST)SPY-ARM-ADJ.am
Approx. Weight: 8.70 lb mass	Used in Assembly #:	Project: Spyder	File #: M134917-1SPY-ARM (ARM REST)SPY-ARM-ADJ.dw

ISCI

INDUSTRIAL SPECIALTY CO. INC.
Precision Machining / Engineered Products / Anodizing
[illegible]

Revision: A

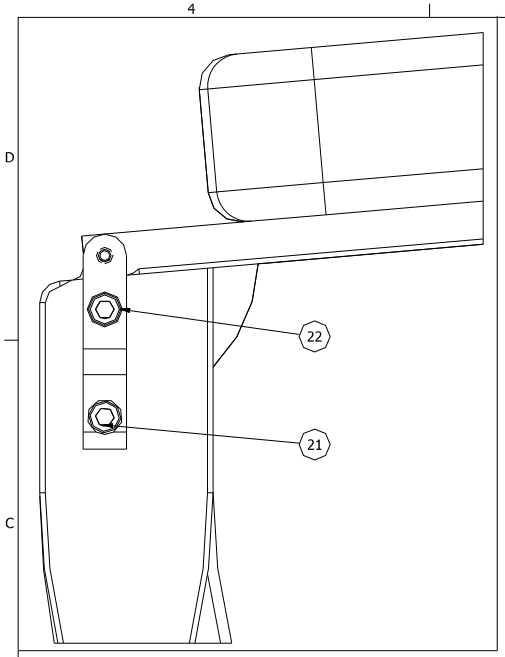

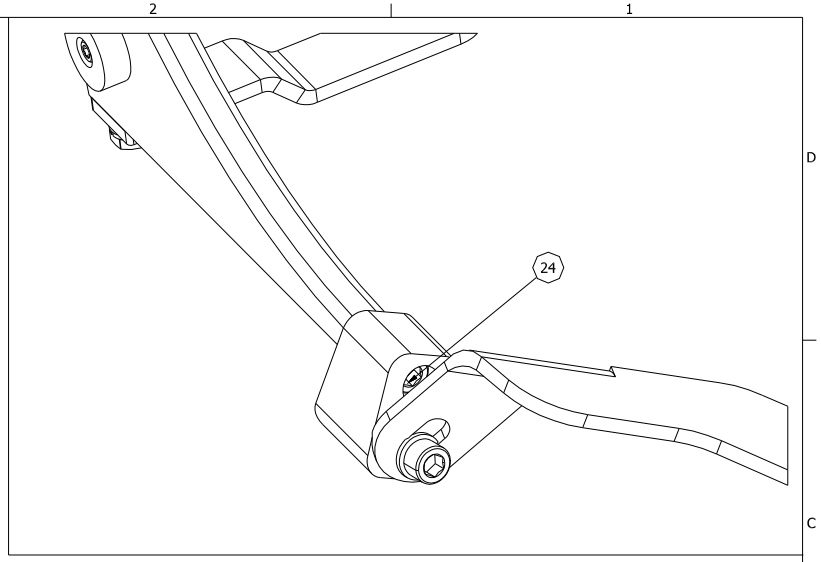

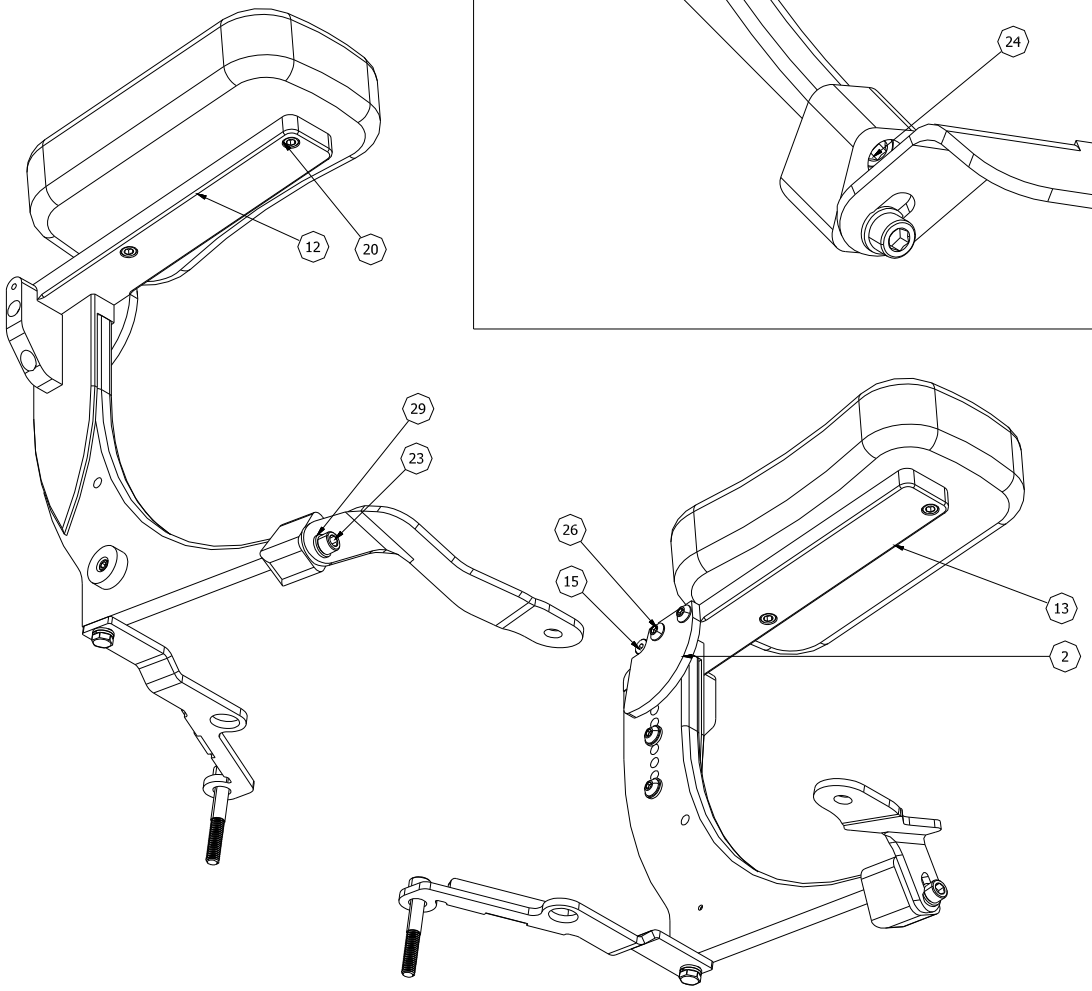

Industrial Specialty Co. Inc. Proprietary Property

This drawing is the proprietary property of Industrial Specialty Company Inc., and must not be used except in connection with our work, not in any manner disclosed to any third party without Industrial Specialty Company Inc.'s prior written consent, all rights of design and invention are reserved.

Scale: NTS | Drawing Unit: IN. [mm]

Tolerances (Unless Noted Otherwise)

	.xxx	.xx	.x
Inches	±.005	±.01	±.02
Fract.	± 1/32"		
Metric	.xx	.x	x
	±.13	±.25	±.5
Angle	± 0°-30'		

Date 3/25/2010	**Material**	**Dimensions**	
Drawn By R.L.K.	**Part #** SPY-ARM-SHORT_RevX	**Finish**	
Surface Area 694.18 in^2	**Description** Arm Rest Assembly (Short)	**Company** ISCI	**Model File #** M:\34917-1\SPY-ARM (ARM REST)\SPY-ARM-ADJ.iam
Approx. Weight 8.79 lbmass	**Used In Assembly #**	**Project** Spyder	**File #** M:\34917-1\SPY-ARM (ARM REST)\SPY-ARM-ADJ.idw

ISCI
INDUSTRIAL SPECIALTY CO. INC.
Precision Machining / Engineered Products / Anodizing
50 Forest Hills Dr. - P.O. Box 3262 - Montgomery, AL 36109
PH (334) 277-2224 FX (334) 277-5846

Revision A

INCLUSIVE IN RELATION TO THE LIABILITY OF ISCI (SELLER).